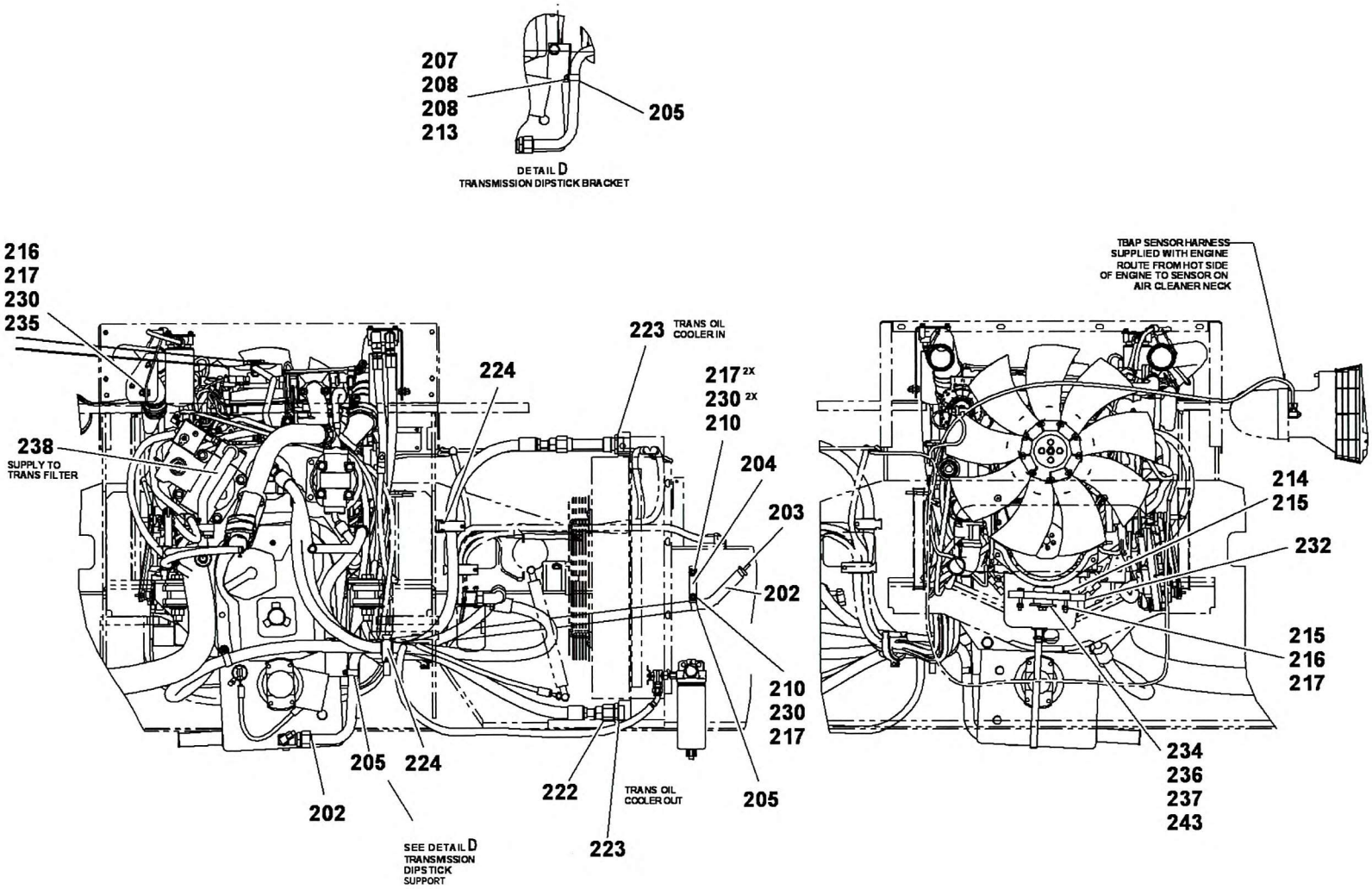
207
208
208
213
205
DETAIL D
TRANSMISSION DIPSTICK BRACKET
216
217
230
235
238
SUPPLY TO
TRANS FILTER
224
223 TRANS OIL
COOLER IN
217 2X
230 2X
210
204
203
202
210
230
217
205
222
TRANS OIL
COOLER OUT
223
205 224
202
SEE DETAIL D
TRANSMISSION
DIPSTICK
SUPPORT
TBAP SENSOR HARNESS
SUPPLIED WITH ENGINE
ROUTE FROM HOT SIDE
OF ENGINE TO SENSOR ON
AIR CLEANER NECK
214
215
232
215
216
217
234
236
237
243

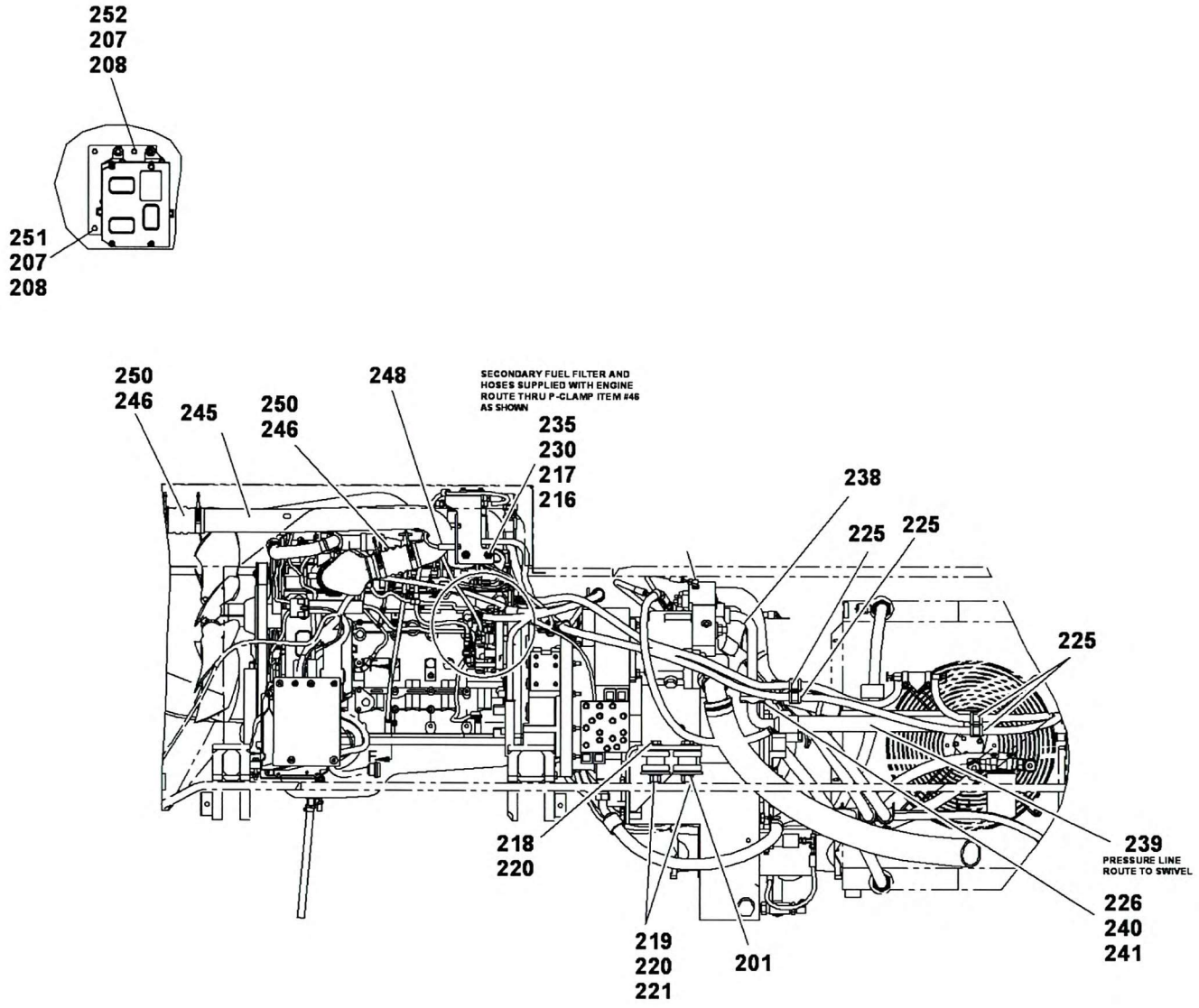
252
207
208
251
207
208
250
246
245
250
246
248
SECONDARY FUEL FILTER AND HOSES SUPPLIED WITH ENGINE ROUTE THRU P-CLAMP ITEM #46 AS SHOWN
235
230
217
216
238
225
225
225
218
220
219
220
221
201
239
PRESSURE LINE ROUTE TO SWIVEL
226
240
241

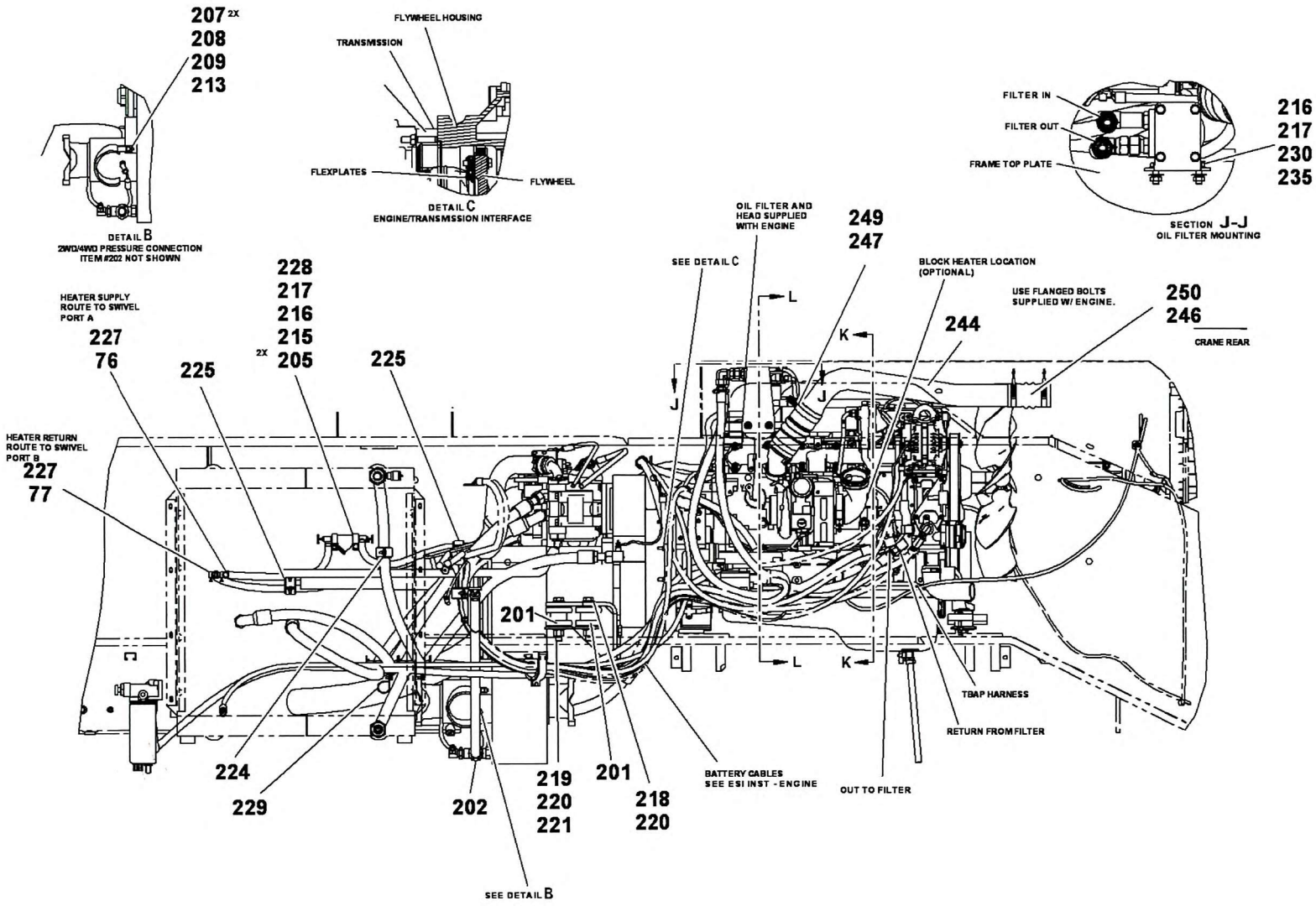
207 2X
208
209
213
DETAIL B
2WD/4WD PRESSURE CONNECTION
ITEM #202 NOT SHOWN
FLYWHEEL HOUSING
TRANSMISSION
FLEXPLATES
FLYWHEEL
DETAIL C
ENGINE/TRANSMISSION INTERFACE
FILTER IN
FILTER OUT
FRAME TOP PLATE
216
217
230
235
SECTION J-J
OIL FILTER MOUNTING
OIL FILTER AND
HEAD SUPPLIED
WITH ENGINE
249
247
SEE DETAIL C
BLOCK HEATER LOCATION
(OPTIONAL)
USE FLANGED BOLTS
SUPPLIED W/ ENGINE.
250
246
CRANE REAR
244
HEATER SUPPLY
ROUTE TO SWIVEL
PORT A
227
76
228
217
216
215
2X 205
225
225
HEATER RETURN
ROUTE TO SWIVEL
PORT B
227
77
201
224
229
202
219
220
221
201
218
220
BATTERY CABLES
SEE ESI INST - ENGINE
OUT TO FILTER
RETURN FROM FILTER
TBAP HARNESS
SEE DETAIL B
J
K
L

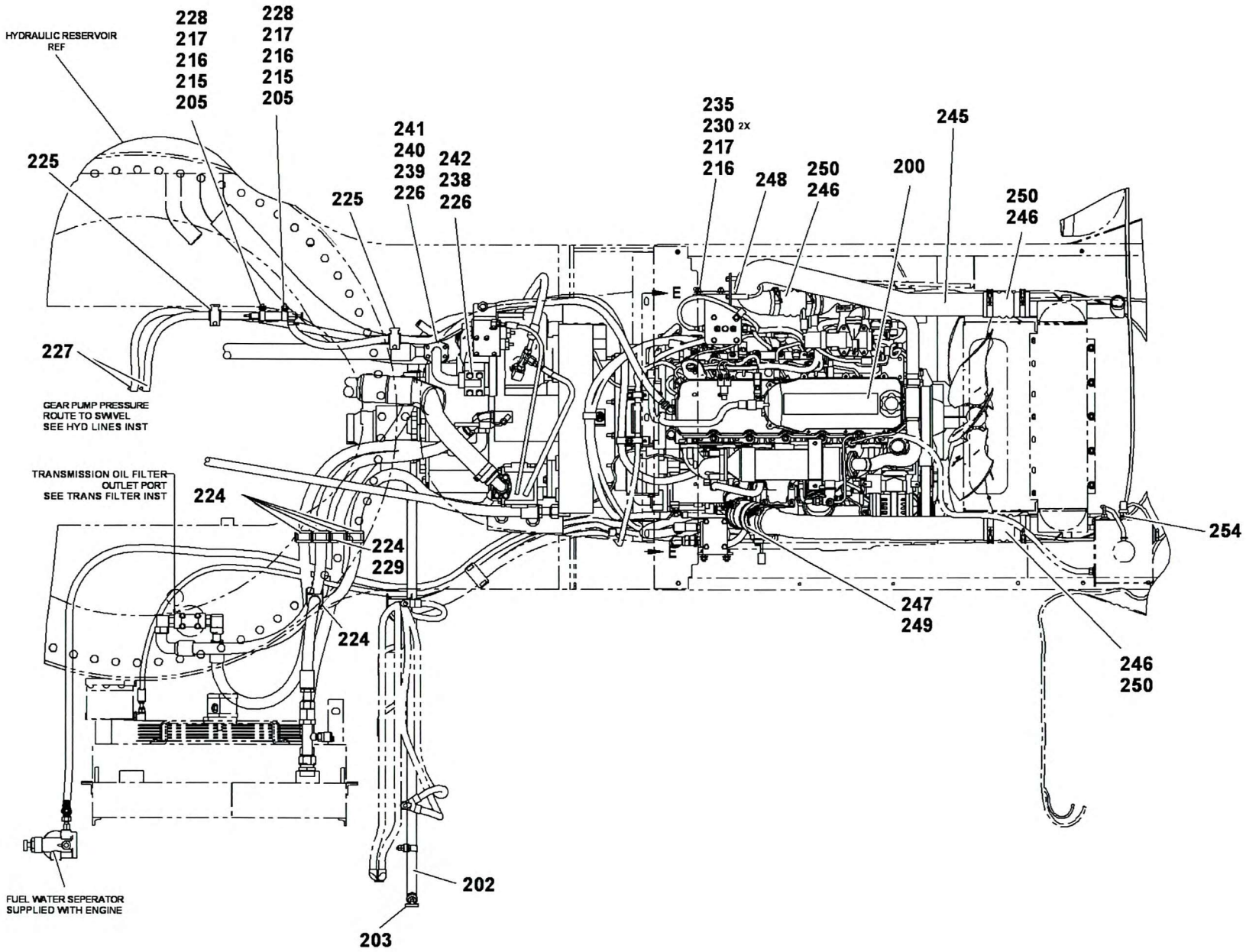
HYDRAULIC RESERVOIR
REF
228
217
216
215
205
228
217
216
215
205
225
225
241
240
239
226
242
238
226
235
230 2X
217
216
248
250
246
200
245
250
246
E
227
GEAR PUMP PRESSURE
ROUTE TO SWIVEL
SEE HYD LINES INST
TRANSMISSION OIL FILTER
OUTLET PORT
SEE TRANS FILTER INST
224
224
229
224
E
254
247
249
246
250
FUEL WATER SEPERATOR
SUPPLIED WITH ENGINE
202
203